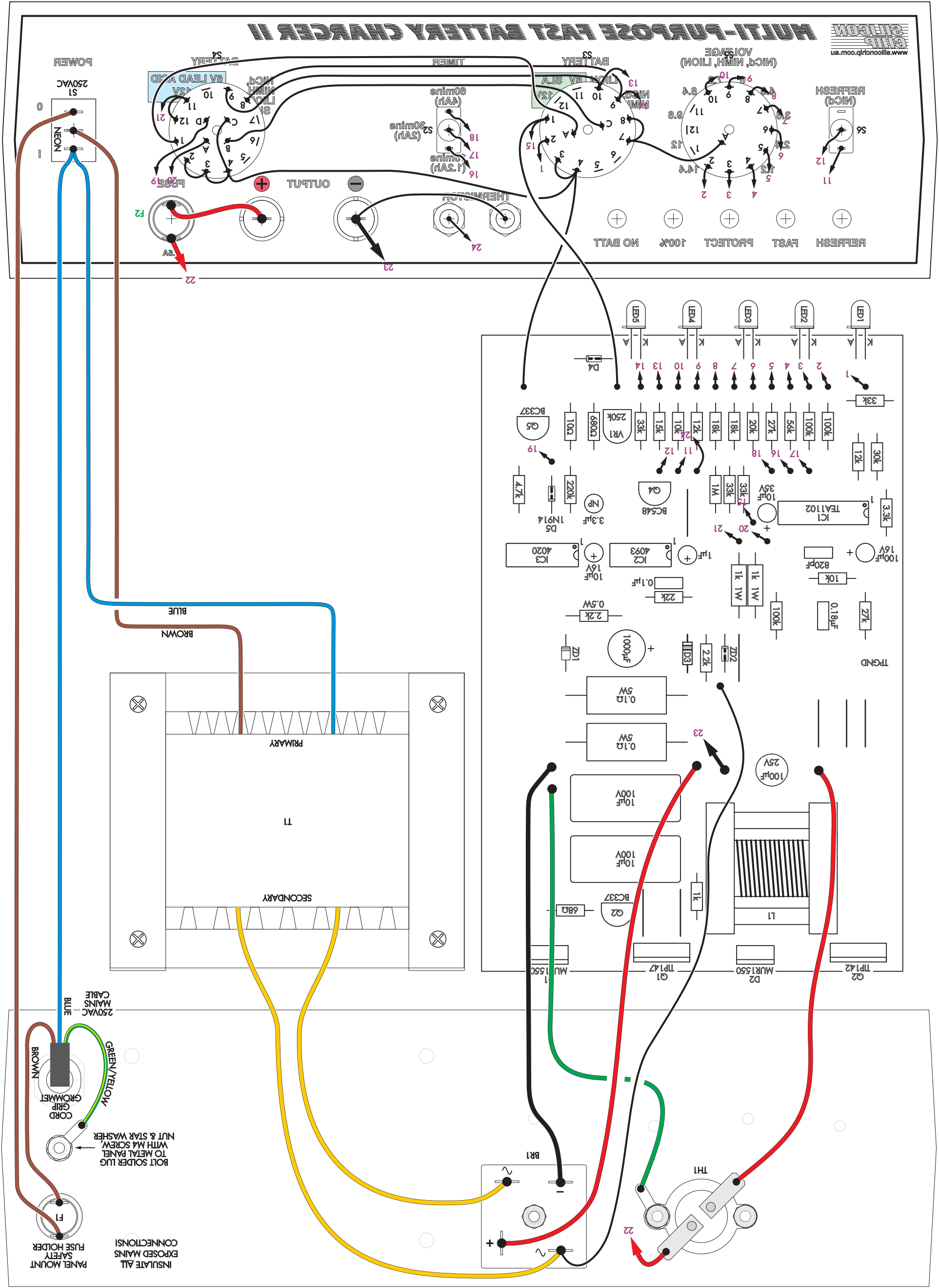
MULTI-PURPOSE FAST BATTERY CHARGER II
SILICON CHIP
www.siliconchip.com.au
POWER
S1
250VAC
NEON
BATTERY
6V LEAD ACID
TIMER
60mins (4Ah)
30mins (2Ah)
15mins (1.2Ah)
S2
FUSE
OUTPUT
THERMISTOR
VOLTAGE (NiCd, NiMH, LiION)
REFRESH (NiCd)
REFRESH
FAST
PROTECT
100%
NO BATT
LED1
LED2
LED3
LED4
LED5
D4
BC337
Q5
VR1 250k
BC548
Q4
IC1 TEA1102
IC2 4093
IC3 4020
D5 1N914
TPGND
ZD1
ZD2
D3
D2 MUR1550
Q1 TIP147
Q2 TIP142
L1
BR1
TH1
PRIMARY
SECONDARY
T1
BLUE
BROWN
250VAC MAINS CABLE
GREEN/YELLOW
CORD GRIP GROMMET
BOLT SOLDER LUG TO METAL PANEL WITH M4 SCREW, NUT & STAR WASHER
F1
PANEL MOUNT SAFETY FUSE HOLDER
INSULATE ALL EXPOSED MAINS CONNECTIONS!